Feasibility Study of Propane Utilization by Transportation Agencies in Road Construction and Maintenance Applications

By:
R. Christopher Williams (PI), phone: (515) 294-4419,
email: rwilliam@iastate.edu

Matthew Mason, phone: (515) 294-4782
email: memason@iastate.edu

Date: November 12, 2007

Submitted To: Propane Education and Research Council

IOWA STATE UNIVERSITY

ctre
Center for Transportation Research and Education

Executive Summary

A feasibility study was undertaken to examine the potential market opportunities of propane in the transportation industry. In general, increasing propane market opportunities during the non-winter months would provide improved propane demand stability. The following six topics were identified and specific information associated with these market opportunities are contained within this report:

- It was found that heat pipes and surface heaters have the potential for snow and ice removal on highway bridges, airport taxiways and runways. Two ternary mixtures with propane as an active ingredient may be possible as the working fluid in these heat pipes.
- The development of a surface heater for melting snow and ice may be possible without any detrimental impacts to the environment or the pavement.
- A method of using propane heaters for curing concrete is discussed that could increase the speed of construction. Heat cured concrete will increase the high early strength, but would result in a lower ultimate strength than would otherwise occur without the heating.
- A beneficial method of drying subbase/base pavement layers of fine grained soils with greater than 20% fines for accelerated construction is discussed. The development of a gas-fired, forced air-propane heater with a scarifier to till the soil would benefit all soil types and increase the speed of construction.
- Energy alternatives for portable hot mix asphalt plants showed that propane could improve the energy efficiency in portable plants. Portable hot mix asphalt plants

could incur financial savings by using propane for heating purposes rather than using No. 2 or No. 5 fuel oil.

- Hot in place recycling (HIPR) utilizes propane as a heating source and offers many benefits to the environment, general public and governmental agencies. A market increase in HIPR could occur if more mainstream hot mix asphalt equipment manufacturers started producing HIPR equipment since there is only one HIPR manufacturer in the United States.

Table of Contents

EXECUTIVE SUMMARY i
TABLE OF CONTENTS iii
LIST OF FIGURES iv
LIST OF TABLES v

1.0 INTRODUCTION 1
2.0 SNOW AND ICE REMOVAL 2
2.1 SURFACE HEATERS 3
2.2 HEAT PIPES 5
3.0 HEAT CURED CONCRETE 9
4.0 DRYING SUBBASE/BASE PAVEMENT LAYERS 12
5.0 PORTABLE ASPHALT PLANTS 14
6.0 HOT IN PLACE RECYCLING (HIPR) 19
7.0 CONCLUSION 22
REFERENCES 24

List of Figures

Figure 1: Snow removal device by L. H. Stonehill (US Patent 3,508,351) 4
Figure 2: Surface Heater and Dryer by Miller and Schmidgall (US Patent 3,970,071).....5
Figure 3: Schematic of the Spring Creek gravity-operated heat pipe 6
Figure 4: Schematic of Virginia's first heated bridge 7
Figure 5: Cross section of evaporator and condenser 7
Figure 6: Effect of moisture and compaction effort on density of an unbound material ..12
Figure 7: Three stage process of evaporation for clay, loam and sand (Lal, 2004).....13

List of Tables

Table 1: Comparison of Projected Operating Costs.....8
Table 2: Average strength development as compared to standard curing (Freyne, 2003) 11
Table 3: Comparison of high and low heating values in Btu/gal for various fuels.....15
Table 4: Estimated portable plant fuel usage per month.....16
Table 5: Estimated portable plant fuel usage per year 16
Table 6: Iowa fuel costs for January to October 2006 18
Table 7: Estimated portable plant fuel cost per month.....18
Table 8: Estimated portable plant fuel cost per year.....18
Table 9: Wirtgen Technical Specifications for HM 4500 and RX 4500 (Wirtgen).....21

1.0 Introduction

The use of propane utilization by transportation agencies in road construction and maintenance has warranted renewed interest with the changing energy markets. A feasibility study was undertaken to examine the potential market opportunities of propane in the transportation industry. The preliminary discussions from the proposal were examined in detail for further research, and include the following:

- Snow and ice removal on highway bridges, airport taxiways and runways,
- Temperature curing for concrete,
- Drying subbase/base pavement layers for accelerated construction,
- Energy alternatives for portable hot mix asphalt plants, and
- Utilization by hot in-place asphalt recycling.

Snow and ice removal on highway bridges, airport taxiways and runways is a major concern because of the high value of the infrastructures. At airports the time delay after placing salts can be significant and can delay planes from landing and taking off. A potential benefit of propane would be a non-chemical means for snow and ice removal that could increase safety and decrease time delays. Adverse impacts from heat should be examined for any detrimental effects of the pavements.

During cold weather, construction of industrial and commercial facilities requires heat to achieve the optimum temperature for placement and curing of concrete. By adding additional heat during the initial set could increase the high early strength of concrete so formwork would be able to be removed earlier. This would increase the speed of construction. A possible method may be the introduction of heat on the float itself when finishing concrete.

Moisture of subbase and base pavement layers can greatly impact the placement and compaction effort on a highway construction project. A drying system for unbound materials which are too wet could lead to faster construction of highway projects.

Portable hot mix asphalt plants currently utilize a variety of fuels including diesel, recycled motor oils and natural gas. The use of propane for portable plants may improve the energy efficiency of the plants. The delivery quantity and system for propane to portable plants as while as a cost comparison with common fuels were examined in detail.

Interest in hot in-place recycling (HIPR) for asphalt pavements as increased with the increase in cost of gasoline and asphalt but only one manufacturer in the United States currently exists. Propane is used in HIPR to heat the pavement surface. By convincing other mainstream hot mix asphalt equipment manufactures to produce HIPR equipment may lead to an increase market for HIPR.

Each of the aforementioned topics are reviewed in more detail in the ensuing sections.

2.0 Snow and Ice Removal

Traditionally snow and ice removal from sidewalks, roadways, bridges and airports have been accomplished by snowplows and by spreading sand and salts. The difficulty with removing snow with snowplows is finding a suitable location to store the snow. This can be a major concern in urban areas with little open space. At times snow will be piled up in snow banks at the low side of large parking lots. This can be a concern when the snow melts allowing the water to seep through cracks or joints in concrete and thus reducing the support of the subgrade. Salts can also lead to the

corrosion of the embedded steel in concrete, which can reduce the useful life of bridges. These issues could potentially be improved by incorporating propane heaters to melt snow. Two different methods of pavement snow melting were found to be promising in the literature. The first method utilizes a propane heater attached to the front of a truck to melt the snow while another more promising method utilizes heat pipes imbedded within the pavement to melt the snow that accumulates on the pavement surface.

The heating requirements of these two methods for melting snow would depend on the rate of snow fall, air temperature, relative humidity and wind velocity (Lund, 2000). A snow melting system would have to heat the snow as determined by the rate of snow fall and then evaporate the remaining water which is determined by air temperature, relative humidity and wind velocity (Lund, 2000). Chapman and Katunich (1956) derived the required heat output (q_o) as shown in equation 1.

$$q_o = q_s + q_m + A_r(q_c + q_h) \qquad \text{Equation 1}$$

Where:

q_o = pavement heat output (Btu/h ft^2),

q_s = sensible heat transferred to the snow (Btu/h ft^2),

A_r = ratio of snow-free area to total area (dimensionless),

q_e= heat of evaporation (Btu/h ft^2), and

q_h = heat transfer by convection and radiation (Btu/h ft^2).

2.1 Surface Heaters

Two devices that utilize a propane heater attached to the front of a truck were found in the literature review, but are just prototypes. No further information was found that these devices were ever manufactured and provided service.

One device that was patented by L. H. Stonehill on April 28, 1970 is titled “Snow removal device having means for melting snow and for disposing of the resulting water” is shown in Figure 1 (US Patent 3,508,351). This snow removal device consists of a blade for scooping snow, propane fired burner-blower, apertures for collecting the melted water and protection for the pavement from excessive heat. The patent claims to be “highly effective in melting snow and ice in continuous operation” and can remove heavy snow falls from roadways, parking lots and runways.

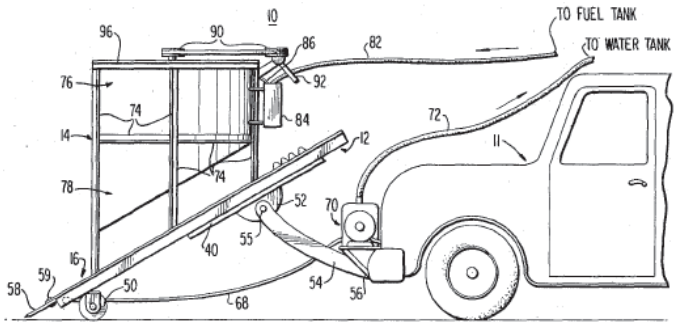

Figure 1: Snow removal device by L. H. Stonehill (US Patent 3,508,351)

Another device that was patented by Russell A. Miller and Earl R. Schmidgall on July 20, 1976 is titled “Surface heater and dryer” has shown in Figure 2 (US Patent 3,970,071). The surface heater and dryer utilize a propane burner and blower for forcing air through the hood in advance of the heater and dryer to melt and evaporate the snow and water. This patent also claims that the surface heater and dryer can be used for other purposes besides melting snow, including evaporating water from the surface of asphalt after a storm, drying a wet soil and drying the surface of playing fields in advance of sporting events.

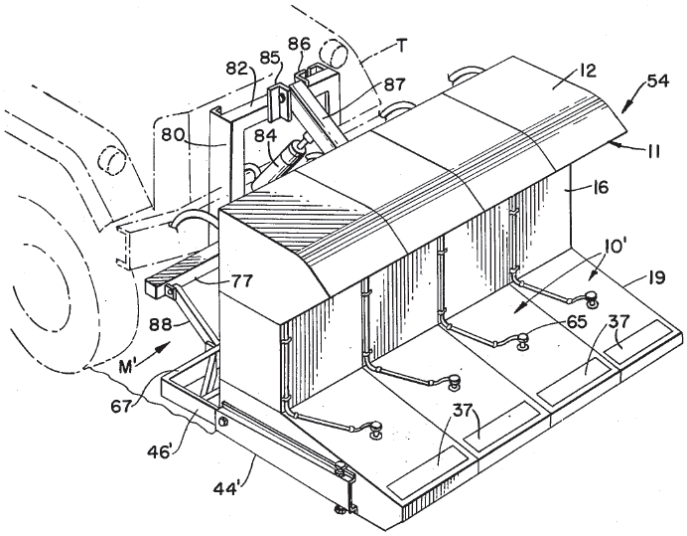

Figure 2: Surface Heater and Dryer by Miller and Schmidgall (US Patent 3,970,071)

2.2 Heat Pipes

Geothermal gravity-operated heat pipes have been used in the past to heat bridge decks. A heat pipe consists of an evaporator and a condenser with interconnecting pipes between the two. The working fluid within these pipes is typically an antifreeze solution which is heated by some means. A typical configuration of the Spring Creek heat pipe is shown in Figure 3 (Lund, 2000). In the Spring Creek heat pipe ammonia was used as the working fluid. The ground heats the ammonia in the evaporator so that the liquid vaporizes. Then the vapor travels up the pipes to the condenser, where the vapor heats the bridge deck by releasing its heat of vaporization as it condenses back into a liquid. To accommodate the liquid having to return back to the evaporator pipe, a 5% slope of the condenser pipes is recommended. It is recommended that the condenser pipes be embedded in portland cement concrete when compared to asphalt concrete because the pipes can be attached to the reinforcing/expansion steel. Pipes should have a minimum of two inches of cover and should not cross expansion or contraction joints. Propane can

be used to heat the working fluid in heat pipes or can potentially become the working fluid with further research.

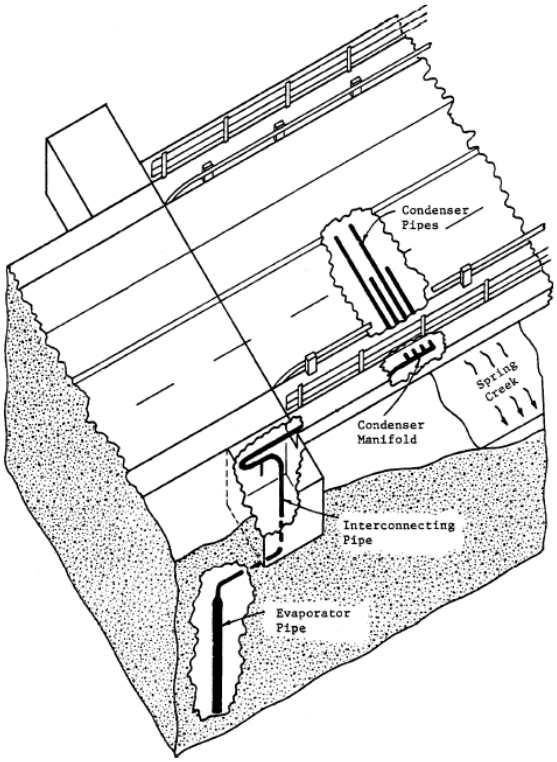

Figure 3: Schematic of the Spring Creek gravity-operated heat pipe

The Virginia Department of Transportation (VDOT) is using propane to heat the working fluid for a heated bridge on Route 60 over the Buffalo River in Amherst County. A schematic of Virginia's first heated bridge is shown in Figure 4 (Hoppe, 2000). The VDOT heat pipe is similar in operation to the Spring Creek heat pipe except that a propane boiler heats a propylene glycol and water solution in a closed loop. The evaporator consists of a 3.5 inch inner diameter pipe carrying the propylene glycol and water solution imbedded in the center of a 6 inch inner diameter pipe containing the working fluid as shown in Figure 5 (Hoppe, 2000). The propylene glycol and water solution heats the working fluid. The original design called for Freon HCFC 123 as the working fluid, but was replaced with ammonia because of uneven heating of the bridge

deck. The condenser pipes were placed at a uniform slope of 6.5% to allow the working fluid to flow back to the evaporator to be reheated.

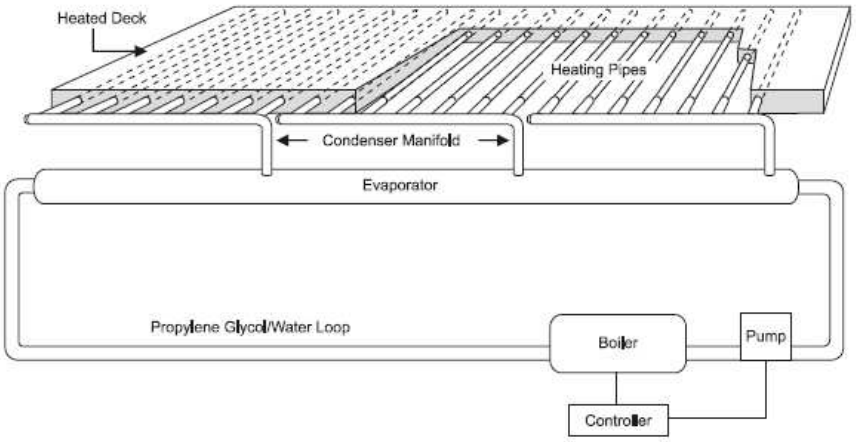

Figure 4: Schematic of Virginia's first heated bridge

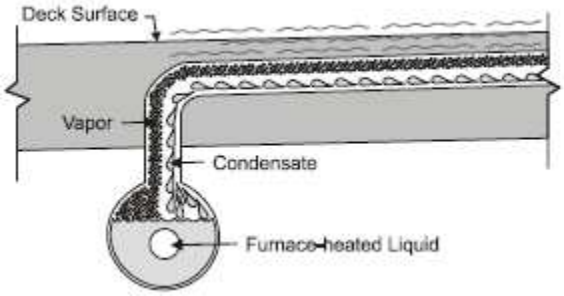

Figure 5: Cross section of evaporator and condenser

The propane fired boiler heat pipe system was chosen because it had the lowest projected annual operating cost among three other alternatives. The alternatives considered were electrical heating cables and a hydronic system with a natural gas boiler or a propane fired boiler. This system operated 92 hours for the winter season from November 5, 1999 to April 18, 2000. The hourly operating cost was approximately $18 and the boiler used approximately 17.4 gallons of propane per hour of operation. The projected operating costs, shown in Table 1, compares the closest alternative if the

heating system needed to operate 50% longer than the 92 hours recorded during the 1999-2000 winter season.

Table 1: Comparison of Projected Operating Costs

System	Operating Costs per year	
Heat Pipe System	$	3,300
Hydronic System	$	6,000

The working fluids for heat pipe systems needs to be carefully chosen to assure uniform heating of bridge decks. The working fluid needs to be able to withstand both high and low temperatures since the heat pipes will not be operated continually. Hydro fluorocarbons or a natural refrigerant like propane, isobutene, ammonia or carbon dioxide is most commonly used in today's geothermal heat pumps (Zwarycz, 2002). Ternary mixtures of propane/R116/R236fa (0.1/0.1/0.8) and propane/R236fa/R32 (0.1/0.8/0.1) were recommended by Zhao et al (2003) for further research as candidate working fluids in heat pumps based upon environmental and thermodynamic aspects and a rough analysis of safety.

The use of propane in heat pipes and heat pumps for snow melting systems can be cost effective. However it would likely be too costly and ineffective to heat an entire runway or highway with heat pipes (Lund, 2000). Heat pipes may be beneficial for melting snow from bridge decks, horizontal curves, limited airport facilities and a down-hill section of a roadway requiring a sudden stop. The superelevation of 4-6% required in the design of horizontal curves allows the use of heat pipes within the design and could increase safety of roadways during the winter. By installing heat pipes on a down-hill section of a roadway where drivers have to stop at a stop light, could decrease the number of red light runners who cannot stop because of icy conditions. The use of heat pipes for

snow removal at airports could potentially be beneficial at certain critical areas where employees are working beside planes including the following: airport hard stands, refueling area, baggage handling areas and passenger walkways (Lund, 2000).

3.0 Heat Cured Concrete

Heating concrete during cold weather concreting is widely accepted and required by ACI Manual of Concrete Practice to achieve the required strength and durability. For a period of three consecutive days, cold weather is defined when the average daily air temperature is less than 40º F (4º C) and the air temperature is not greater then 50º F (10º C) for more than 12 hours in any 24 hour period (ACI 306R). Cold weather concreting is practiced to prevent freezing, to ensure required strengths are met, to assure curing condition achieves normal strength without excessive heat, to limit temperature changes and to provide protection that is consistent with the intended use of the structure (ACI 306R). Curing can potentially be accelerated by providing additional heat during the initial set, like upon the completion of finishing. This can increase the speed of construction. However, during cold weather concreting, placement at higher temperatures above 20º F (-6º C), that is recommended by ACI 306R, will increase the speed of finishing but can also affect the long-term concrete properties adversely. Three recent research papers stating results similar to this are discussed in the following paragraphs.

Topçu and Toprak (2005) investigated the effect of curing temperature and fine aggregate on early strength development. The concrete mixture used Type III high early strength cement with two different types of fine aggregate with the same composition rates. The fine aggregate used in the concrete mixtures were river sand from the Sakarya

River in Turkey and crushed stone sand. The curing process involved a one hour preheating, a 6 or 18 hour cure process in a cabinet at 20, 40 and 60 ºC, followed by a 2 hour cure treatment and then the concrete was stored in a curing tank at 20º C. The results show that increasing the cure temperatures, improve the early strength development but decreased the 28 day strength.

Freyne, Russell and Bush (2003) investigated the effect of heat curing on compressive strength at ages of 1, 28, and 56 days for a variety of high performance concrete mixtures containing type III cement. Seven heat curing schemes in three categories were developed to simulate typical processes in the manufacture of precast/prestressed concrete bridge beams. Standard curing following the procedure outlined in ASTM C192 was one category. The other two categories were moderate and intense heat curing and each had three curing methods. With the exception of one intense heat curing scheme, concrete cylinders undergoing heat curing were immersed in a water bath up to the mold's rim. The other method for one intense heat curing scheme involved steam curing. The average strength development of standard versus moderate or intense heat curing is shown in Table 2. These results show that heat curing increased the early strength development but at the expense of ultimate strength. Also intense heat was more detrimental then moderate heat curing. The results also showed, that moderate heat curing in cement only mixtures without fly ash, silica fume or slag did not increase early strength development. But mixtures that included fly ash enhanced early strength development.

Table 2: Average strength development as compared to standard curing (Freyne, 2003)

Strength	Moderate	Intense
1 day	2.3%	17.0%
28 day	-6.8%	-20.7%
56 day	---	-25.8%

Khayat and Lessard (1994) investigated the effect of heat curing on the early strength development of 100 MPa air-entrained concrete. Standard curing of concrete specimens followed the procedure outlined in ASTM C192. Heat cured specimens were cured on a steel heated bed with 50º C water, flowing through the pipes and covered with insulating blankets. Cast and cored concrete specimens were tested for compressive strength, elastic modulus, flexural and splitting tensile strengths, chloride ion permeability and frost durability. The results showed that after 33 hours heat cured concrete increased early strength. After 4 days of age the compressive strength for heat cured concrete was approximately 15% less then standard cured concrete. Also the flexural strength for heat cured concrete was between 30 to 40 percent less then standard cured concrete. The paper also concluded that the air entrained high strength concrete developed high early strength without heat curing.

Heat cured concrete has been shown to increase early strength development at the expensive of ultimate strength. Heating concrete to speed up construction could potentially be economically feasible, if the concrete mix is over designed to adjust for the lost of medium and long-term compressive strength upon heat curing. A method of using propane heaters to introduce heat upon the completion of floating and finishing a concrete slab could potentially be developed with further research.

4.0 Drying Subbase/Base Pavement Layers

The placement and compaction effort of subbase and base layers can greatly impact the length of a highway construction project. The optimum moisture content is essential in obtaining the desired compaction effort. The relationship between moisture content and compaction effort on density is shown in Figure 6 (Das, 1990). The required density will not be attainable if the soil is either too dry or too wet. Certain types of soils take longer to dry than others. A device or equipment to dry unbound materials which are beyond optimum moisture content could lead to faster construction of highways projects.

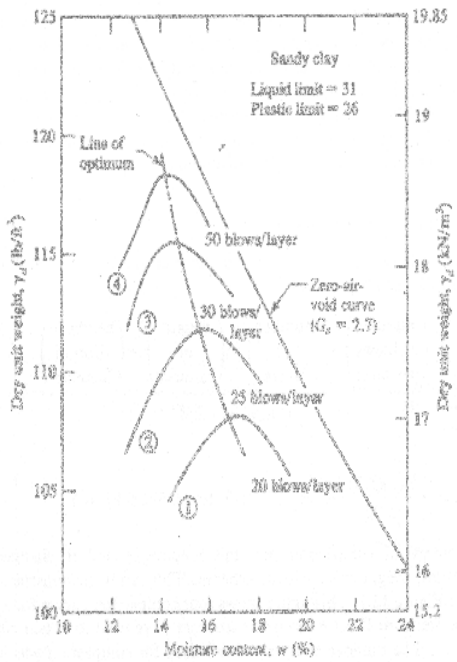

Figure 6: Effect of moisture and compaction effort on density of an unbound material

Less then 40 years ago, a contractor built a device to dry wet earth fill prior to compaction. Great Lakes Construction Company of Cleveland, Ohio was awarded the contract to build a four level interchange for I-77 and I-80 (Construction Methods and Equipment, 1971). The contractor built a jet drier and was able to decrease the time to

compact one lift by 2 to 3 times, when compared to air drying to try to improve the efficiency of the compaction process. The jet drier modified a Caterpillar D8H dozer to include a rotating scarifier that mixes the produced hot air with the soil and a jet engine from a navy fighter plane. The rotating scarifier would penetrate the soil about 9 inches to mix up the soil while being heated by the hot gases from the jet exhaust.

The evaporation of water from a soil is both a function of atmospheric conditions and soil properties. The process of drying a soil is a three stage process, as shown in Figure 7 for three different types of soils (Lal, 2004). The initial constant rate stage is denoted as Phase I in Figure 7, as plenty of water near the surface and is governed by atmospheric conditions. As can be seen in Figure 7, the evaporation rate for fine grained soils stays constant longer than for coarse grained soils. This can be attributed to the fact that fine grained soils generally have a higher absorptivity of water than coarse grained soils. The falling rate stage is denoted as Phase II in Figure 7 and is governed by a transition from atmospheric conditions to soil properties. The slow rate stage is denoted as Phase III in Figure 7 and is governed by soil properties. Atmospheric conditions might have a greater impact than soil properties when drying soils that are wet of optimum.

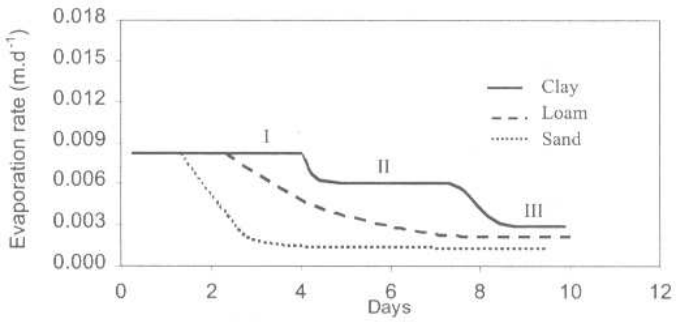

Figure 7: Three stage process of evaporation for clay, loam and sand (Lal, 2004)

As stated earlier, different types of soils are affected by atmospheric conditions differently. It was found that A-2-4 soils with greater than 20% fines will have slow

drying rates and high suction values when the relative humidity and temperatures are high (Ping, 2000). If coarse soils are allowed time to redistribute water, the evaporation from the surface will be less. This is attributed to faster internal drainage and less retention of water (Jalota, 1986). Also the total evaporation from finer grained soils will remain higher than coarser grained soils under identical conditions because of more moisture near the surface of the soil (Jalota, 1986). Finer grained soils are more problematic than coarser grained soils when trying to dry the soil during construction. As a result finer grained soils would possibly have more benefits from a jet drier type device.

The development of a propane heater to dry soil could potentially increase the speed of construction depending on the soil type. All soil types could benefit from a drier device, but fine grained soils with greater then 20% fines could have the highest benefit in terms of drying times. An effective means of drying soils would be with a combination of tilled soil, wind and sunshine as stated by Winegardner (1996). The important components of a propane heater for drying soil would be a scarifier to till the soil and a gas-fired, forced-air, propane heater to simulate the wind and sunshine.

5.0 Portable Asphalt Plants

Portable hot mix asphalt plants are similar in design as stationary plants with the primary difference being the heavy equipment is mounted on trailers for easy transport. These portable plants can utilize several fuels, including diesel, recycled motor oils, natural gas and propane. Propane is not the most common fuel but is available. The use of propane could improve energy efficiency in portable plants. The delivery quantity, method of delivery and a cost comparison with common fuels were examined, to determine if propane usage at portable asphalt plants is feasible.

The heating value of a fuel indicates how much heat a fuel can produce. This can be used to determine the cost of the fuel per British thermal unit (Btu) (Heatec, Inc. 1999). The heating values for fuels can be cited by suppliers as either low heating value (LHV) or high heating value (HHV). A comparison of high and low heating values for various fuels is shown in Table 3 (Heatec, Inc. 1999). The gross amount of heat used by a fuel is the HHV while the LHV is the useable amount of heat that is produced by the fuel. The difference in HHV and LHV is the loss of moisture in the fuel. Heatec, Inc. recommends using the LHV when calculating the amount of fuel needed in the production process at hot mix asphalt plants (1999).

Table 3: Comparison of high and low heating values in Btu/gal for various fuels

Fuel	HHV	LHV
No. 2 Fuel Oil	140,000	132,000
No. 5 Fuel Oil	150,000	143,250
Propane	90,500	84,345

The estimated fuel usage in gallons per day for a typical portable asphalt plant was determined based upon the delivery method of the asphalt binder. The first method assumed that to reach the desired temperature of the asphalt, it would be required to increase the temperature by 25º F upon delivery. The second method assumed that the asphalt would be delivered at 300º F and would only have to maintain the temperature. The estimated fuel usage was calculated by dividing the total daily heat output in Btu/day by the LHV of the fuel. The estimated fuel usage per month and per year is shown in Table 4 and Table 5 for a typical portable asphalt plant, respectively.

Table 4: Estimated portable plant fuel usage per month

Asphalt Temperature Required at Delivery	Propane gal/month	No. 2 gal/month	No. 5 gal/month
Raise 25° F	1020	650	600
Maintain 300° F	1000	640	590

Table 5: Estimated portable plant fuel usage per year

Asphalt Temperature Required at Delivery	Propane gal/year[1]	No. 2 gal/year[1]	No. 5 gal/year[1]
Raise 25° F	12230	7760	7170
Maintain 300° F	12000	7670	7070

[1] Assumes 12-month operation.

The value required to raise the temperature of asphalt by 25° F is based upon several assumptions. It was estimated that the asphalt binder would be delivered to the site 8 times per year. A conversion factor of 400 lb is approximately 48 gallons of asphalt binder was used to calculate this value (The Asphalt Institute, 2007). Also the typical portable asphalt plant components, that requires heating consists of the following (Heatec, Inc. 1999):

- One 30,000 gallon Heli-tank with 3-inch insulation for asphalt,
- Double barrel drum mixer, (7’ x 35’),
- Drag conveyor on surge bin, (1’ x 50’),
- 70’ of asphalt piping with 1.5-inch insulation, 4-inch diameter jacket,
- 150’ of hot oil piping with 1.5-inch insulation, 2-inch diameter, and
- Heater efficiency of 85%.

The largest tanks that a typical local propane dealer sells are 1000 gallon tanks. Mission Gas Company from San Antonio, TX states that a 1000 gallon tank for industrial and commercial applications will hold approximately 800 gallons of propane and it is

possible to connect two tanks together for high volume use. It is likely that a propane truck or trailer can be directly attached to portable plants for increased propane capacity. Figure 8 shows a large propane trailer in front of a portable asphalt plant that is for sale (Aggregate Designs Corporation, 2007). An average size propane truck is 3000 gallons and the average size propane trailer is 11,500 gallons.

Figure 8: Propane Trailer in front of a portable asphalt plant

Based upon the high volume use of propane for a typical portable plant, a large supply of propane gas would be required. A supply of propane could last approximately one and a half months if two 1000 gallon propane tanks are piped together. If a propane truck/trailer is used then one full tank could last between 2 to 9 months depending on the size of the truck or trailer.

A cost comparison between propane and two common fuels used for portable asphalt plants was completed to determine the cost savings of using propane. The low, average and high cost for propane and heating oil was determined from the 2006 Iowa petroleum update for months January to October as shown in Table 6 (Iowa Department of Natural Resources). Heating oil has a greater price variation then propane and is higher in the summer months. The variation in propane costs is more random.

Table 6: Iowa fuel costs for January to October 2006

Fuel	Low	Average	High
Propane	$ 1.45	$ 1.48	$ 1.53
Heating Oil	$ 2.10	$ 2.40	$ 2.87

The estimated portable plant fuel cost per month and per year is shown in Table 7 and 8, respectively. If the plant uses more fuel when the price is low, then the No. 2 and No. 5 fuel oil would be less expensive than propane. Based on the average cost, the No. 5 fuel oil is the most affordable and No. 2 fuel oil is the most expensive of the three fuels. Propane would be more affordable then both No. 2 and No. 5 fuel oils when the price is high. A typical portable plant would most likely use more fuel in the summer during the bulk of the construction season when the cost of heating oil is the highest so the average cost would most likely be higher than what is represented in Tables 7 and 8. Since the variance in propane cost is small without a significant trend, the average fuel cost for propane is a good estimate. A typical portable asphalt plant could potentially save money if propane is used instead of No. 2 or No. 5 fuel oil.

Table 7: Estimated portable plant fuel cost per month

Cost	Propane $/month	No. 2 $/month	No. 5 $/month
Low	$ 1,450	$ 1,344	$ 1,239
Average	$ 1,480	$ 1,533	$ 1,413
High	$ 1,530	$ 1,837	$ 1,693

Table 8: Estimated portable plant fuel cost per year

Cost	Propane $/year[1]	No. 2 $/year[1]	No. 5 $/year[1]
Low	$ 17,400	$ 16,107	$ 14,847
Average	$ 17,760	$ 18,370	$ 16,933
High	$ 18,360	$ 22,013	$ 20,291

[1] Assumes 12-month operation.

6.0 Hot in Place Recycling (HIPR)

Hot in place recycling (HIPR) is a method of recycling asphalt pavements without transporting the material. The process involves heating the surface layers, scarifying the softened layers and remixing with the addition of a recycling agent. Depending upon the process involved, virgin asphalt and/or aggregate can be added to improve the mix design before compaction. Three different HIPR practices are recognized by the Asphalt Recycling and Reclaiming Association (ARRA). The processes of HIPR are heater scarification, repaving, and remixing. Heater scarification involves heating the in-place HMA surface, scarifying the softened surface, rejuvenating the mix, leveling and compacting (Gressett, 1995). Repaving is similar to heater scarification except that new HMA is added on top of the rejuvenated old HMA surface and the two layers are compacted together. Remixing is similar to both heater scarification and repaving except that the new HMA is mixed with the rejuvenated old HMA.

The HIPR process can correct surface distresses in asphalt pavements with a good base course. The surface distresses that can be fixed with HIPR are rutting, corrugations, raveling, flushing, and loss of surface friction, minor thermal cracking and load associated cracking (Gressett, 1995). Careful selection of HIPR projects is required, as discovered by the Oregon Department of Transportation (ODOT). Based on ODOT experience, pavements that are not good candidates for HIPR are pavements that are stripped (undergone moisture damage), extensively patched and have extensive delaminations (Rogge et al, 1996). Ideal candidates for HIPR, as recommended by the ODOT, are the following projects (Rogge et al, 1996):

- a large area,
- are far away from conventional HMA suppliers,
- is uniform,
- has an absolute viscosity of less than 10,000 poises,
- have air voids greater then 6%, and
- having good contractors with the latest equipment.

HIPR offers many benefits to the environment, general public and governmental agencies. The cost for HIPR can be between 10 to 50% less than conventional paving because there is no transportation or storage cost of the old asphalt pavement (Button et al, 1995). The safety of other motorists can be improved because the length of time for pavement drop offs is minimized and also there are less traffic disruptions (Button et al, 1995). Many geographic areas have a limited supply of virgin aggregate and sometimes the aggregate used in old pavements is the best available (Polak, 2004). When compared to conventional paving, HIPR has been shown to have an energy savings of 32% (Button et al, 1995). HIPR is viewed by the general public positively because of increased awareness of conserving natural resources and by being able to observe an old pavement become new (Gressett, 1995).

Four known HIPR equipment manufacturers are currently selling and producing HIPR trains. The remixer 4500 and panel heating machine HM 4500 are manufactured in Germany by Wirtgen. The Wirtgen HIPR train utilizes a remixing process. Cutler Repaving, Incorporated is located in Kansas and utilizes a repaving process. Pyropaving 300E is manufactured in British Columbia, Canada by Pyrotech and utilizes a remixing process as well. Patterson Industries is the parent company that manufactures Enviro-

Paver R1015. The corporate office for Enviro-Pave Incorporated is located in Ontario, Canada. Enviro-Paver R1015 is the most versatile HIPR train because it provides an option to utilize all three HIPR processes with additional add-on components. However, the heater scarification process is the preferred process that is recommended by Enviro-Pave for their equipment.

The Wirtgen company website provided technical specifications for models RX 4500 and HM 4500. An estimate of propane usage and propane cost per square yard was calculated based upon these technical specifications. The technical specifications including the maximum heater width, propane tank size, maximum heating performance, calculated propane usage rate and average working speed are shown in Table 9. This information was used along with the LHV for propane to estimate the duration one tank full of propane will last. This value was then used to estimate the cost per square yard of propane. Based on the calculations, one full size tank of propane will last 17.3 hours and 24 hours in the panel heating machine model HM 4500 and the remixer model RX 4500, respectively. The expected cost of propane used per square yard was calculated to be between 27 to 43 cents depending on the speed of the HIPR train.

Table 9: Wirtgen Technical Specifications for HM 4500 and RX 4500 (Wirtgen)

Technical Specifications	HM 4500	RX 4500
Maximum heater width	4.5 m	4.5 m
Gas tank	6000 L	5300 L
Maximum heating performance	2260 kW	1445 kW
Calculated propane usage rate	91.4 gal/hr	58.5 gal/hr
Average working speed	1.6 to 2.5 m/min	1.6 to 2.5 m/min

7.0 Conclusion

The propane industry has several market opportunities within the transportation industry that may require additional research and/or discussions with manufacturers. The following conclusions may have potential for further research:

- It was discovered that it may be possible to develop a surface heater for melting snow without any detrimental impacts from the environment or the pavement.
- The development of ternary mixtures of propane/R116/R236fa (0.1/0.1/0.8) and propane/R236fa/R32 (0.1/0.8/0.1) may be possible as working fluids for heat pipe systems if it can be shown that they provide a uniform heating of bridge decks. The use of heat pipes may be beneficial for melting snow from bridge decks, horizontal curves, critical airport facilities and a down-hill section of a roadway requiring a sudden stop.
- A method of using propane heaters to introduce heat upon the completion of floating and finishing concrete could speed up construction by increasing the early strength development of the concrete but the ultimate strength of the concrete may be lower. This process would be useful if the ultimate strength meets or exceeds the design specifications.
- The development of a gas-fired, forced-air propane heater with a scarifier to till the soil would benefit all soil types and increase the speed of construction. However fined grained soils with greater then 20% fines would have the highest benefit in terms of drying times.

- If propane is used instead of No. 2 or No. 5 fuel oil for heating purposes in a typical portable asphalt plant, then the HMA plant might save some money on the cost of fuel during the construction season.
- By approaching other mainstream hot mix asphalt equipment manufacturer for producing HIPR equipment, who could teach contractors how to use their equipment, could lead to substantial market increase in HIPR which utilizes propane as a heating source. HIPR increases safety for motorists, decreases costs and saves energy when compared to conventional paving.

References

Aggregate Designs Corporation. Advertisement. 2007. 27 June 2007. <http://www.aggdesigns.com/equipment/equipment_menu.cfm?WebCategory=Asphalt%20Plants>

American Concrete Institute. "Cold Weather Concreting." Manual of Concrete Practice, ACI 306R: 1-23.

Button, Joe W., Cindy K. Estakhri and Dallas N. Little. "How states use hot-in-place recycling." Better Roads July 1995: 19-20.

Cutler Repaving, Inc. 5 July 2007. <http://www.cutlerrepaving.com/home.html>.

Das, Braja M. "Principles of Geotechnical Engineering," 2nd Edition, PWS-Kent Publishing Company, Boston, MA, 1990, pg. 578.

Enviro-Pave Inc. "Enviro-Paver." 2001. Patterson Industries Limited. 5 July 2007. <http://www.enviro-pave.com/index.htm>.

Freyne, Seamus F., Bruce W. Russell and Thomas D. Bush, Jr. "Heat Curing of High-Performance Concrete Containing Type III Cement." ACI Materials Journal 100.6 (2003): 449-454.

Gressett, Jennifer. "Hot In-Place Recycling." TR News 177 (1995): 10-12.

Heatec, Inc. "Heating and Storing Asphalt at HMA Plants." T-140. (2003): 1-42 < http://www.heatec.com/literature/Tec-Notes/TechnicalPapers.htm>.

"HIR encourages restoration." World Highways/Routes du monde. March 2000: 53-55.

Hoppe, Edward J. "Final Report Evaluation of Virginia's First Heated Bridge." Virginia Transportation Research Council, VTRC 01-R8. Dec. 2000: 1-29.

Iowa Department of Natural Resources. "Iowa Petroleum Update" (2006). <http://www.iowadnr.com/energy/news/petroleum.html>

Jalota, S. K. and S. S. Prihar. "Effects of Atmospheric Evaporativity, Soil Type and Redistribution Time on Evaporation from Bare Soil." Australian Journal of Soil Research 24 (1986): 357-366.

"Jet heating turns wet soil dry." Construction Methods and Equipment 53.5 (1971): 114-116.

Khayat, K.H. and M. Lessard. "Influence of Early Heat Curing on Properties of 100-MPa Air-Entrained Concrete." Transportation Research Record 1458 (1994): 91-98.

Lal, Rattan, and Manoj K. Shukla. Principles of Soil Physics. Columbus, OH: Marcel Dekker, Inc. 2004: 440-452.

Lund, John W. "Pavement Snow Melting." GHC Bulletin June 2000: 12-19.

Miller, Russell A and Earl R. Schmidgall. "Surface Heater and Dryer." US Patent 3970071. 20 July 1976.

Ping, W. Virgil, Ching-Chin Ling and Robert K. H. Ho. "Influence of Soil Suction and Environmental Factors on Drying Characteristics of Granular Subgrade Soils." Transportation Research Record 1714 (2000): 98-106.

Polak, Mike. "Recycling saves money and impact." Better Roads. July 2004.

Pyrotech. "Pyropaver 300E Hot In-Place Asphalt Recycling System." 5 July 2007. < http://www.pyropaver.com/>.

Rogge, David F., Walter P. Hislop and Dick Dominick. "Oregon's hot-in-place recycling guidelines." Better Roads. July 1996: 14-18.

Stonehill, Lloyd H. "Snow Removal Device having means for Melting Snow and for Disposing of the Resulting Water." US Patent 3508351. 28 April 1970.

The Asphalt Institute. "Plant Operations." FAQ. Small Paving Projects and Residential FAQs. 12 Nov. 2007. <http://www.asphaltinstitute.org/ai_pages/FAQs/Small_Paving_Projects_Residential_FAQs.asp>

Topçu, İlker Bekir and Mehmet Uğur Toprak. "Fine aggregate and curing temperature effect on concrete maturity." Cement and Concrete Research 35. (2005): 758-762.

Wingardner, Duane L. An Introduction to Soils for Environmental Professionals. Boca Raton, FL: Lewis Publishers. 1996: 92-94.

Wirtgen. "Hot Recyclers."2001-2007. Wirtgen Group. 5 July 2007. <http://www.wirtgen.de/eng/eprod/ehotr.html>

Wirtgen. "Panel heating machine HM 4500 Technical Specification." (2004): 1-4. < http://www.wirtgen.de/eng/eprod/ehm4500.html>.

Wirtgen. "Technical Specification Remixer 4500." (2006): 1-7. <http://www.wirtgen.de/eng/eprod/erx4500.html>.

Zhao, P.C., L. Zhao, G.L. Ding and C.L. Zhang. “Temperature matching method of selecting working fluids for geothermal heat pumps.” Applied Thermal Engineering 23 (2003): 179-195.

Zwarycz, Katarzyna. “Snow Melting and Heating Systems based on Geothermal Heat Pumps at Goleniow Airport, Poland.” Geothermal Training Programme 21. The United Nations University. 2002: 431-464.